INSEAD The Business School for the World®

Process and Operations Management
Tutorial 2: Managing Variability

Stefanos Poulidis

POM Tutorials

- Session 1: Process Improvement
- **Session 2: Managing Variability**
- Session 3: Managing Risks (The Newsvendor Model) I
- Session 4: Managing Risks (The Newsvendor Model) II

Managing Variability
Step 1: Write down all the parameters

Customer parameters

- Arrival rate, λ: number of customers *arriving* per unit time (e.g., 10 [customers/h])
- Average interarrival time (*IAT*): average time between two consecutive arrivals, $\overline{IAT} = \frac{1}{\lambda}$
- Coefficient of variation for arrivals, CV_a: extent of variability of arrivals in relation to their mean,

$$CV_a = \frac{\text{standard deviation of IAT}}{\text{mean of IAT}}$$

Example: Poisson arrivals of mean λ have exponentially distributed interarrival times with std.dev. = mean = $\frac{1}{\lambda}$, hence $CV_a = \frac{1/\lambda}{1/\lambda} = 1$.

Managing Variability
Step 1: Write down all the parameters

Service parameters

- Service rate (capacity), μ: number of customers *served* per unit time (e.g., 20 [customers/h])
- Average service time, τ: average time it takes to serve one customer, $\tau = 1/\mu$ (0.05 [h])
- Coefficient of variation for services, CV_s: extent of variability of services offered in relation to their mean,

$$CV_s = \frac{\text{standard deviation of service time}}{\text{average service time}} = \frac{\text{standard deviation of service time}}{\tau}$$

Example: Service times that are distributed exponentially with parameter μ: std.dev. = mean = $\frac{1}{\mu}$, hence $CV_s = \frac{1/\mu}{1/\mu} = 1$.

Managing Variability
Step 1: Write down all the parameters

Performance measures

- L_q: average number of customers waiting in the queue
- L: average number of customers waiting in the system overall (queued + on service)
- W_q: average waiting time in the queue
- W: average total waiting time in the system (queue + service), $W = W_q + \tau$
- **Little's Law**: $L_q = \lambda \cdot W_q$, and $L = \lambda \cdot W$

Managing Variability
Step 2: Find the number of servers *s*

Managing Variability
Step 3: Find the utilization of a server ρ

$$\rho = \frac{\lambda}{\mu \cdot s} = \frac{\lambda \cdot \tau}{s}$$

Managing Variability
Step 4: Calculate the average waiting time in the queue

Calculations here depend on the number of servers *s*:

- Case 1: If *s* = 1, use the following formula for W_q:

$$W_q = \tau \frac{\rho}{1-\rho} \frac{1}{2} \left(CV_a^2 + CV_s^2\right)$$

- Case 2: If *s* > 1 (there are multiple servers), you can use the waiting time formula for multiple servers

$$W_q = \frac{\tau}{s} \frac{1}{1-\rho} \frac{1}{2} \left(CV_a^2 + CV_s^2\right) \rho^{(\sqrt{2\,(s+1)}-1)}$$

Managing Variability
Step 5: Calculate the average total waiting time in the system

Average total waiting time in the system = queueing time + service time:

$$W = W_q + \tau$$

Managing Variability
Step 6: Calculate the average number of customers

If you haven't yet found L_q in step 4, then calculate it using Little's law:

$$L_q = \lambda \cdot W_q$$

For the total number of customers in the system you can also use Little's law:

$$L = \lambda \cdot W$$

A Petroleum Refinery

An integrated petroleum company is considering expansion of its one unloading facility at its Australian refinery. Due to random variations in weather, loading delays, and other factors, ships arriving at the refinery to unload crude oil arrive according to the Poisson distribution ($CV_a = 1$) with an average arrival rate of 8 ships per week. Service time is exponential with an average service rate of 12 ships per week ($CV_s = 1$).

Mean arrival rate of ships to facility: $\lambda = 8$ ships/week

Mean service rate of ships at facility (capacity of facility): $\mu = 12$ ships/week

Mean utilization rate of facility: $\rho = 8/12 = 0.667$

Because arrivals are Poisson, $CV_a = 1$, and because service times are exponential, $CV_s = 1$.

Also note that $\tau = 1/\mu = 0.0833$ weeks.

A Petroleum Refinery

Mean arrival rate of ships to facility: λ = 8 ships/week

Mean service rate of ships at facility (capacity of facility): μ = 12 ships/week

Mean utilization rate of facility: ρ = 8/12 = 0.667

Because arrivals are Poisson, CV_a = 1, and because service times are exponential, CV_s = 1.

Also note that $\tau = 1/\mu$ = 0.0833 weeks.

a) Current performance measures:

i. What is the average number of ships waiting to gain access to the single unloading facility?

Little's Law tells us that $L_q = \lambda W_q$.

So once we find W_q, we will have L_q.

$W_q = \tau \frac{\rho}{(1-\rho)} \frac{1}{2} (CV_a^2 + CV_s^2)$=*0.167 weeks*

And thus $L_q = \lambda W_q$ = 8 * 0.167 = 1.336 ships

A Petroleum Refinery

Mean arrival rate of ships to facility: λ = 8 ships/week

Mean service rate of ships at facility (capacity of facility): μ = 12 ships/week

Mean utilization rate of facility: ρ = 8/12 = 0.667

Because arrivals are Poisson, CV_a = 1, and because service times are exponential, CV_s = 1.

Also note that $\tau = 1/\mu$ = 0.0833 weeks.

a) Current performance measures:

ii. What is the average time a ship must wait before beginning to deliver its cargo to the refinery?

$W_q = \tau \frac{\rho}{(1-\rho)} \frac{1}{2} (CV_a^2 + CV_s^2)$=*0.167 weeks*

A Petroleum Refinery

Mean arrival rate of ships to facility: λ = 8 ships/week

Mean service rate of ships at facility (capacity of facility): μ = 12 ships/week

Mean utilization rate of facility: ρ = 8/12 = 0.667

Because arrivals are Poisson, CV_a = 1, and because service times are exponential, CV_s = 1.

Also note that $\tau = 1/\mu$ = 0.0833 weeks.

a) Current performance measures:

iii. What is the average total time (waiting plus actual delivery) that a ship spends at the refinery?

$W = W_q + \tau = 0.167 + 0.0833 = 0.25$ *weeks*

A Petroleum Refinery

b) The company has under consideration a second unloading berth that could be rented for $6,000 per week. The service time for this berth would also be exponential (CV_s=1) with the same service rate of 12 ships per week as the company's own berth. The opportunity cost of a ship not being at sea is $30,000 per week.

Since there are two servers, sharing the same load, the overall utilization of the facility will be decreased. We denote the number of servers by *s*.

Mean utilization rate of facility:

$$\rho = \frac{\lambda\tau}{s} = \frac{8\ ships/week\ \ * 0.0833\ weeks/ship}{2} = 0.33$$

A Petroleum Refinery

b) The company has under consideration a second unloading berth that could be rented for $6,000 per week. The service time for this berth would also be exponential (CV_s=1) with the same service rate of 12 ships per week as the company's own berth. The opportunity cost of a ship not being at sea is $30,000 per week.

i. If the second berth is rented, what will be the average number of ships waiting?

$$W_q = \frac{\tau}{s}\frac{1}{1-\rho}\frac{1}{2}\left(CV_a^2 + CV_s^2\right)\rho^{\left(\sqrt{2(s+1)}-1\right)}$$

W_q = 0.01

*$L_q = \lambda W_q$ = 8*0.01 = 0.08*

A Petroleum Refinery

b) The company has under consideration a second unloading berth that could be rented for $6,000 per week. The service time for this berth would also be exponential (CV_s=1) with the same service rate of 12 ships per week as the company's own berth. The opportunity cost of a ship not being at sea is $30,000 per week.

ii. What would be the average time a ship would wait?

W_q = 0.01 weeks

Total time?

$W = \tau + W_q$ = 0.08333 + 0.01 = 0.0933 weeks

A Petroleum Refinery

b) The company has under consideration a second unloading berth that could be rented for $6,000 per week. The service time for this berth would also be exponential (CV_s=1) with the same service rate of 12 ships per week as the company's own berth. The opportunity cost of a ship not being at sea is $30,000 per week.

iii. Is the benefit of reduced waiting time (in dollars) worth the rental cost for the second berth?

(0.25 weeks – 0.0933 weeks) * $30,000/(ship*week) * 8 ships/week

= $37,600/week vs $6,000/week

Yes, it is worth the investment given the reduction in the weekly cost of delay to ships, for an estimated gain per week of $31,600.

A Petroleum Refinery

c) An alternative way to improve unloading facilities is for the company to modify the current operations to speed up the unloading process. Specifically, the new service time would still be exponential (CV_s=1), but with a mean service rate of 15 ships per week. The incremental cost of the new operations would be $ 4,000 per week.

Mean arrival rate of ships to facility: λ = 8 ships per week

Mean service time per ship at facility: μ = service rate = 15 ships per week

Note that the mean service rate is just the inverse of the mean service time:

$\mu = 1/\tau \Rightarrow \tau = 1/\mu$ = 0.0667 weeks per ship

Mean utilization rate of facility: ρ = 8 ships per week/15 ships per week = 0.53

A Petroleum Refinery

c) An alternative way to improve unloading facilities is for the company to modify the current operations to speed up the unloading process. Specifically, the new service time would still be exponential (CV_s=1), but with a mean service rate of 15 ships per week. The incremental cost of the new operations would be $ 4,000 per week.

i. Compute the (new) average number of ships waiting.

$W_q = \tau \frac{\rho}{(1-\rho)} \frac{1}{2} (CV_a^2 + CV_s^2)$=*0.075 weeks*

A Petroleum Refinery

c) An alternative way to improve unloading facilities is for the company to modify the current operations to speed up the unloading process. Specifically, the new service time would still be exponential (CV_s=1), but with a mean service rate of 15 ships per week. The incremental cost of the new operations would be $ 4,000 per week.

ii. Compute the (new) expected waiting time and total time for ships.

$W = W_q + \tau = 0.075 + 0.067 = 0.14$ *weeks*

A Petroleum Refinery

c) An alternative way to improve unloading facilities is for the company to modify the current operations to speed up the unloading process. Specifically, the new service time would still be exponential (CV_s=1), but with a mean service rate of 15 ships per week. The incremental cost of the new operations would be $ 4,000 per week.

iii. Is the benefit worth the incremental cost?

$$(0.25 \text{ weeks} - 0.14 \text{ weeks}) \times \frac{\$30{,}000}{\text{ship week}} \times \frac{8 \text{ ships}}{\text{week}} = \$26{,}400/\text{week benefit vs. } \$4{,}000/\text{week cost}$$

Yes, the benefit in reduced total time at the facility is worth the investment, for a weekly net gain of $22,400.

Note that the rental of a second unloading berth (alternative in question (b) above) is preferable to modifying current operations (alternative in question (c) here).

A Petroleum Refinery

c) An alternative way to improve unloading facilities is for the company to modify the current operations to speed up the unloading process. Specifically, the new service time would still be exponential (CV_s=1), but with a mean service rate of 15 ships per week. The incremental cost of the new operations would be $ 4,000 per week.

iv. How would you answer i-iii above if, instead of speeding up the service rate of the facility, the new operations made the service time constant, but still with the old service rate of 12 ships per week?

If the arrival rate is 8 ships per week and the mean service rate is 12 ships per week, then the utilization of the capacity is

ρ = 8 ships per week/ 12 ships per week = 0.667

We use the same formula as in (ii), but now $CV_s^2 = 0$.

Why? Since the service time is constant, there is no variability, and the coefficient of variation for service is zero. Then, we get,

$W_q = \tau \frac{\rho}{(1-\rho)} \frac{1}{2} (CV_a^2 + CV_s^2)$=*0.0833 weeks*

A Petroleum Refinery

c) An alternative way to improve unloading facilities is for the company to modify the current operations to speed up the unloading process. Specifically, the new service time would still be exponential (CV_s=1), but with a mean service rate of 15 ships per week. The incremental cost of the new operations would be $ 4,000 per week.

iv. How would you answer i-iii above if, instead of speeding up the service rate of the facility, the new operations made the service time constant, but still with the old service rate of 12 ships per week?

Therefore $W = W_q + \tau$ = *0.0833 + 0.0833 = 0.167 weeks.*

Finally, we determine the change in the average total waiting time, to determine the economic benefit of the investment:

(0.25weeks – 0.167weeks) * $30,000/(ship*week) * 8 ship/week = $20,160/week vs $4,000/week

The net gain is now $16,160 per week, which is less than the previous two alternatives (from parts (b) and (c) above). All are better than current situation.

Queueing Theory in Court (Based on an actual case)

A worker at the State Unemployment Office is responsible for processing a company's forms when it opens for business. The worker can process an average of 4 forms per week. In 1992 an average of 1.8 companies per week submitted forms for processing, and the worker had an order flow time of 0.45 weeks. In 1993 an average of 3.9 companies per week submitted forms for processing and the worker had a 5 week order flow time. The poor worker was fired, but later sued to get her job back. The court said that because the amount of work submitted to the worker had approximately doubled, the worker's backlog also should have doubled. Because her backlog increased by more than a factor of 10, she must have been slacking off, so the state was justified in firing her. Assume exponential service times and Poisson arrivals and a FCFS (first come, first served) queueing discipline.

Use the concepts and tools learned in POM to defend the worker.

Queueing Theory in Court (Based on an actual case)

The judgement of the court was that the worker had been slacking off, meaning that her service rate (μ) had decreased with the increased workload (as λ increased from 1.8 to 3.9 forms/week). To defend the worker, we must compute the new service rate and show that it is at least 4 forms/week.

We know that $\lambda = 3.9$ forms/week and $W = 5$ weeks, and we want to solve for μ.

$$W = W_q + \tau = \tau \frac{\rho}{(1-\rho)} \frac{1}{2}(CV_A^2 + CV_S^2) + \tau = \tau \frac{\rho}{(1-\rho)} + \tau$$

Then, using $\rho = {}^{\lambda}/_{\mu}$ and $\tau = {}^{1}/_{\mu}$:

$$W = \frac{1}{\mu} \cdot \frac{\lambda/\mu}{(1-\frac{\lambda}{\mu})} + \frac{1}{\mu} = \frac{1}{\mu} \cdot \frac{\lambda/\mu}{(\mu-\lambda)/\mu} + \frac{1}{\mu} = \frac{\lambda}{\mu(\mu-\lambda)} + \frac{1}{\mu} = \frac{1}{\mu-\lambda}$$

$$5 = \frac{1}{\mu - 3.9} \Rightarrow \mu = 4.1\ forms/week$$

Therefore, the service rate of the worker had actually increased, she should have not been fired, she should have been given a raise!

Queueing Theory in Court (Based on an actual case)

Note: We didn't need to use the information given for the year 1992, because we were already given 4 forms/week as the average service rate.

Using that information does not change the answer: you find 4.02 forms/week as the worker's previous average service rate and it still increased to 4.1 forms/week.

Service Facility Design

A service organization has the following process design. There are two separate but identical service centers (with one employee each) that serve two distinct geographic areas. Each center has random service time with a mean of 10 minutes and a standard deviation of 10 minutes. Customers arrive at each center with an inter-arrival time of 12 minutes. The standard deviation of this inter-arrival time is 12 minutes.

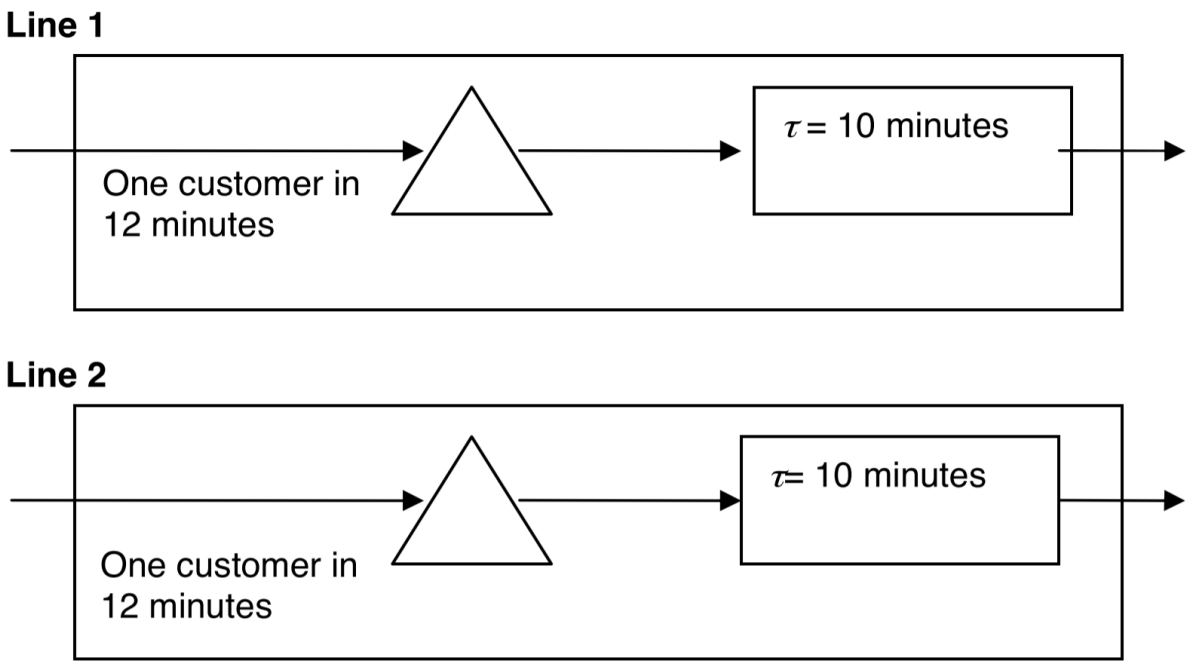

Service Facility Design

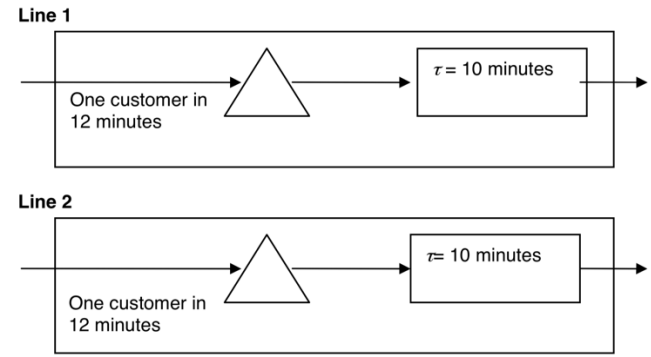

a) What is the current average wait time in minutes?

τ = 10 minutes

λ =1/12

s = 1

Utilization ρ = τ*λ = 10/12 = 0.833

CV_A = 12/12 = 1, CV_S = 10/10 = 1

$W_q = \tau \frac{\rho}{(1-\rho)} \frac{1}{2} (CV_a^2 + CV_s^2)$ = 50 minutes

W = 60 minutes

Service Facility Design

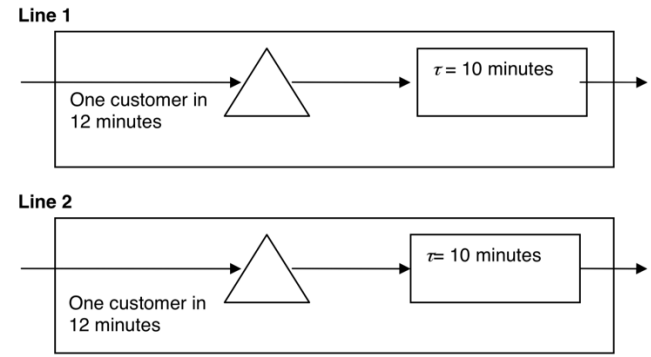

b) The organization is considering strategies to reduce wait times. In particular, it is considering reducing service time from 10 minutes to 5 minutes. In this case, the standard deviation of service time would also be reduced from 10 minutes to 5 minutes. What is the average wait time in minutes if this strategy is implemented?

τ = 5 minutes

λ =1/12

ρ = 5/12 = 0.417

CV_A = 12/12 = 1, CV_S = 5/5 = 1

$W_q = \tau \frac{\rho}{(1-\rho)} \frac{1}{2} (CV_a^2 + CV_s^2)$ = 3.57 minutes

W = 8.57 minutes

Service Facility Design

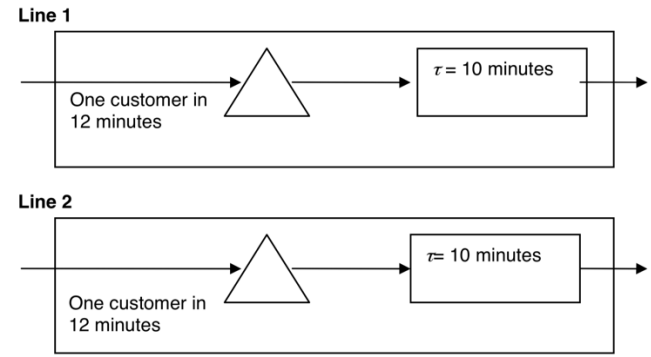

c) Another strategy to reduce waiting time involves standardizing the activity, which would reduce the standard deviation of the service time from 10 to 2.5 minutes. Service time of 10 minutes will remain unchanged. What is the average wait time if this strategy is implemented?

τ = 10 minutes

λ =1/12

ρ = 10/12 = 0.833

CV_A = 12/12 = 1, CV_S = 2.5/10 = 0.25

$W_q = \tau \frac{\rho}{(1-\rho)} \frac{1}{2} (CV_a^2 + CV_s^2)$ = 26.49 minutes

W = 36.49 minutes

Service Facility Design

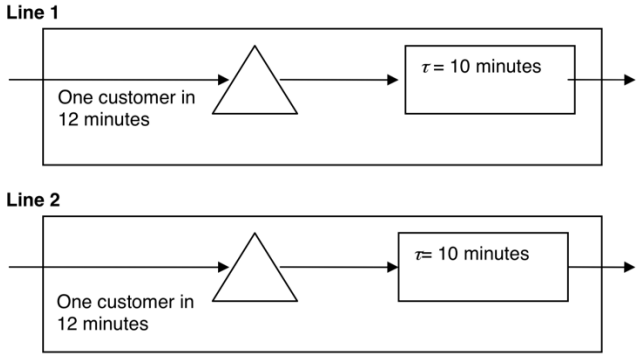

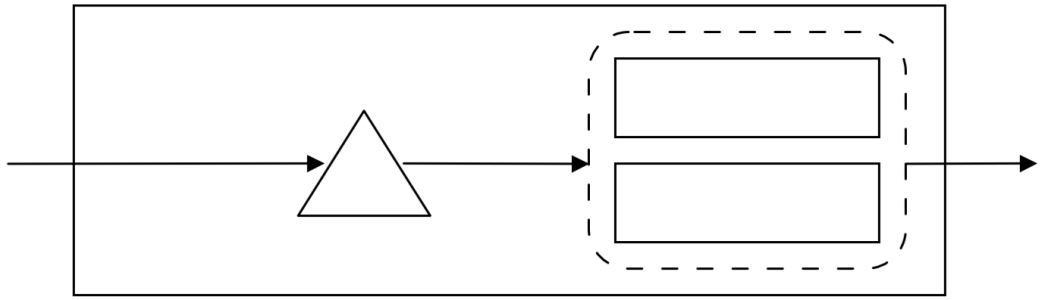

d) The final strategy considered is to merge the two centers as shown above (in this case, the standard deviation of the inter-arrival times will be 6 minutes). What is the average wait time if this strategy is implemented?

τ = 10 minutes, λ = 2/12 = 1/6, s = 2

CV_A = 6/6 = 1, CV_S = 10/10 = 1

ρ = (1/6)/(2*1/10) = 10/(6*2) = 0.83

$$W_q = \frac{\tau}{s}\frac{1}{1-\rho}\frac{1}{2}\left(CV_a^2 + CV_s^2\right)\rho^{\left(\sqrt{2(s+1)}-1\right)}$$

W_q = 22.97 minutes *(W = 32.97 minutes)*